ROUND 1 - Thursday, April 21, 2022

SHOTLINK

Zurich Classic of New Orleans

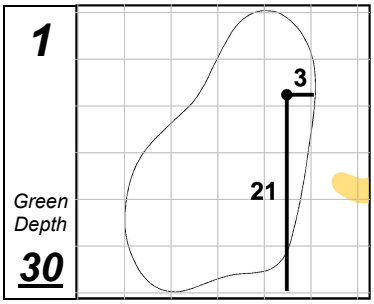

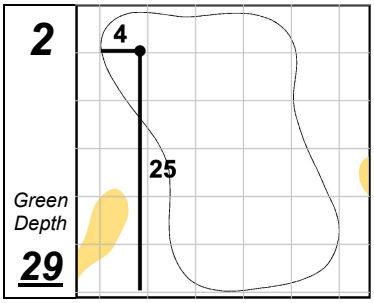

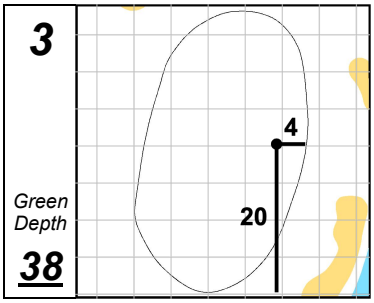

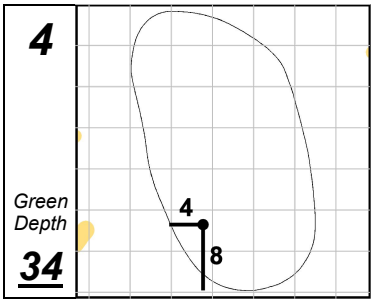

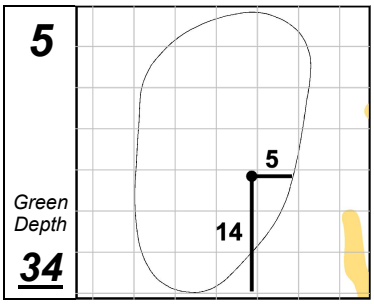

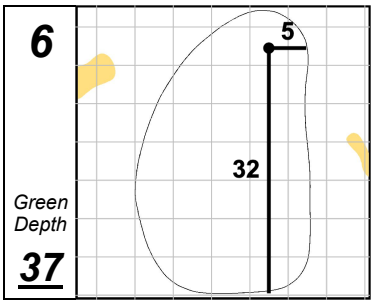

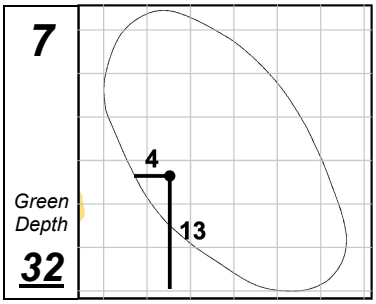

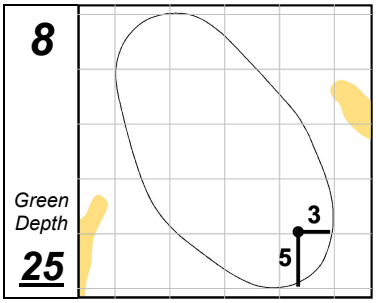

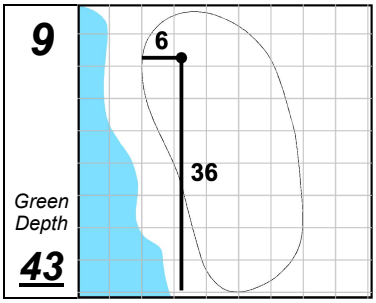

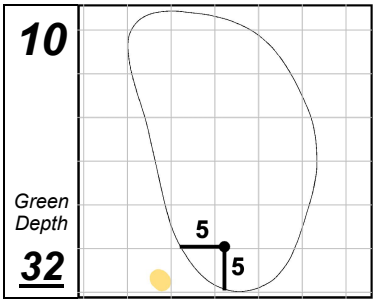

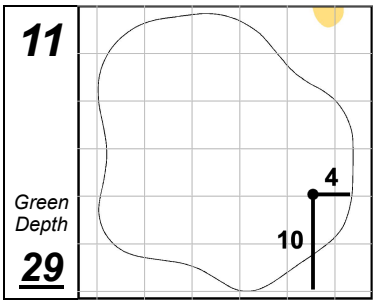

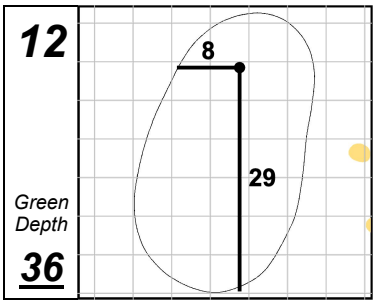

TPC Louisiana

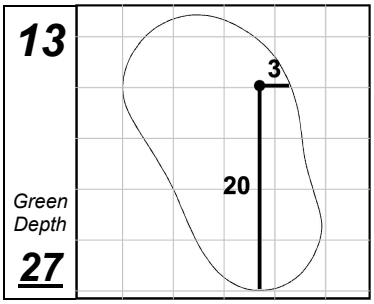

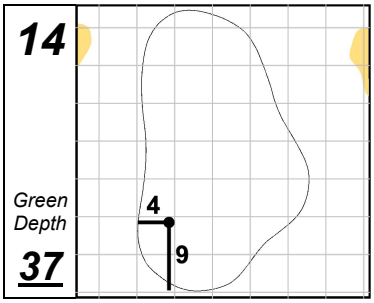

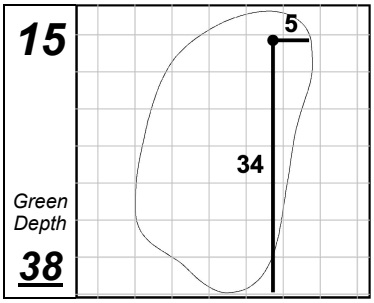

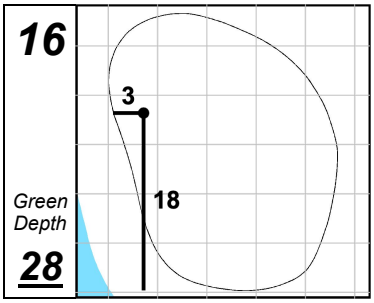

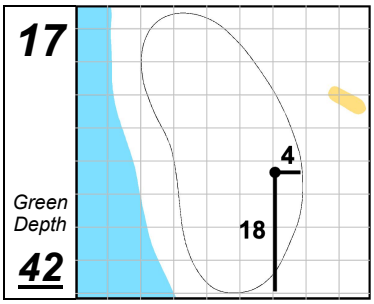

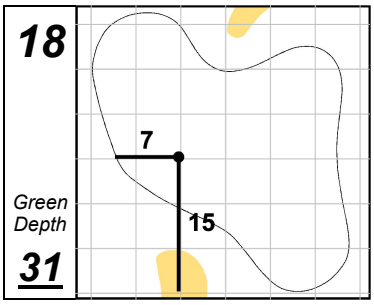

Each side of a complete square on the green represents 5 YARDS.

Wednesday, April 20, 2022 8:40:16 AM